BANCO MOD. "LUNAR"

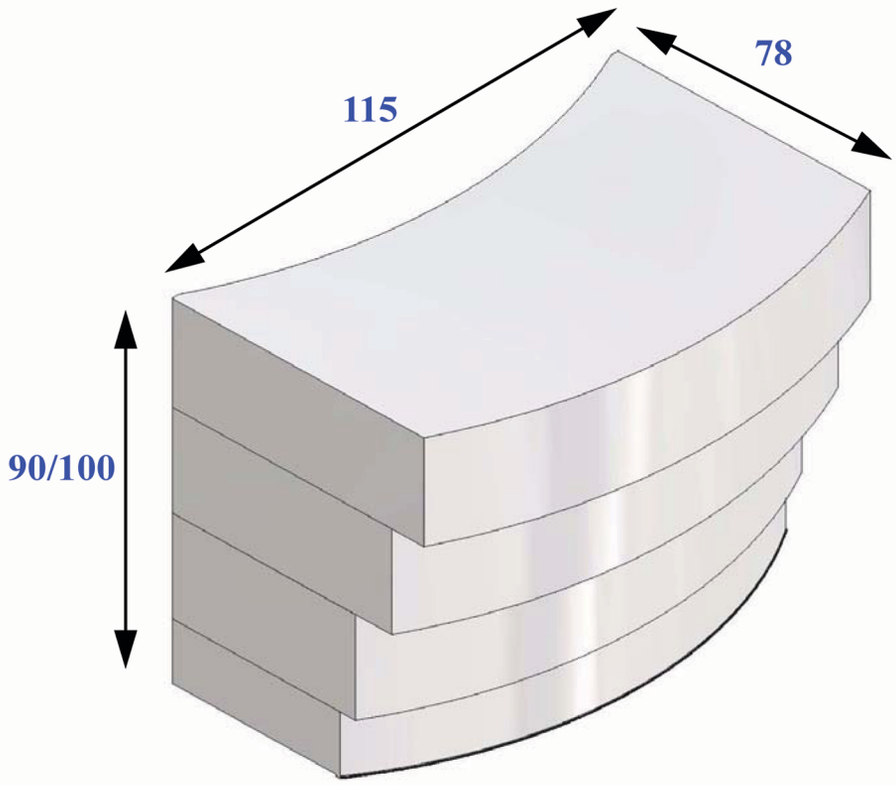

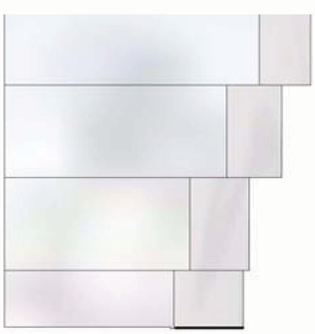

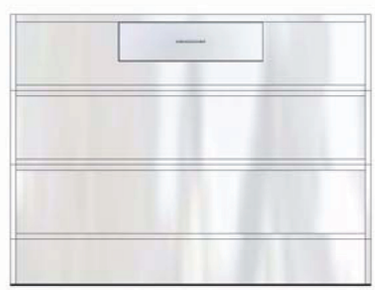

	H90	H100
	518.11578	518.11578/8